# REMOVE AND REPLACE SC PULLEY

**WITH COUNTERBORE SCREW**

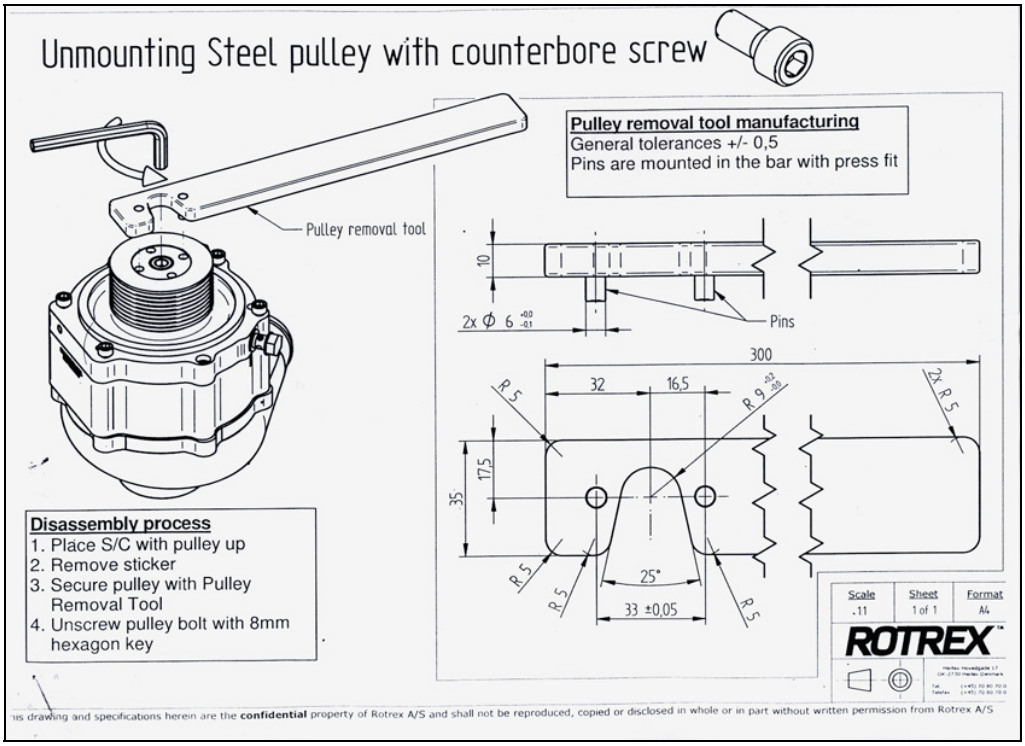


## TO REMOVE PULLEY:

**-Wrap an old belt around pulley and hold with channel lock pliers. Use 8mm allen socket to pull bolt counter clockwise.**

**Make sure that pulley does not slip, this will loosen shaft internally and cause damage to the blower.**

## TO REPLACE PULLEY:

**-Install pulley on blower and ensure collar on the pulley back is seated into the blower.**
**-Once seated, light oil the threads of the allen bolt and hand tighten until snug.**
**-Wrap an old belt around pulley to help protect pulley grooves**
**-With a channel lock pliers, grasp pulley**
**-Tighten allen bolt to 37 Ft/Lbs.**

**DO NOT USE AIR TOOLS TO TIGHTEN OR REMOVE PULLEY. WILL UNLOCK BLOWER SHAFT INTERNALLY**